ENFORCER®

MVA-VH01Q

VGA-to-HDMI Converter

Manual

HDMI®
HIGH-DEFINITION MULTIMEDIA INTERFACE

Up to
1280x1024
Resolution

- Converts VGA formats to HDMI.
- Supports resolution up to 1280x1024.
- Audio input allows conversion of audio as well as video.
- Plug and play operation—no setup neccessary.

SECO-LARM®

RoHS

NOTE: Model numbers that end with “Q” or products that have a round green “Q” sticker signify RoHS compliance.

Introduction:

The MVA-VH01Q VGA-to-HDMI Converter allows the user to view video from VGA devices (such as computers) on large HDMI displays. Active operation allows the conversion of formats as large as 1280x1024. The MVA-VH01Q also has an RCA input allowing the conversion of audio to HDMI formats as well.

Specifications:

Supported resolutions	640x480; 800x600; 1024x768; 1280x720; 1280x768; 1280x960; 1280x1024
Video input signal	0.5~1Vp-p
DDC input signal	5Vp-p
Vertical frequency	50/60Hz
Video amplifier bandwidth	1.65Gpbs/165MHz
Operating temperature	32°~158° F (0°~70° C)
Operating humidity	5%~95% RH (no condensation)
Current draw	1A
Dimensions	$3^1/_2$" x$2^5/_8$" x1" (88x68x25.5 mm)
Weight	24-oz (680g)

Parts List:

1 x VGA to HDMI Converter 1 x 5VDC Power Adapter 1 x Manual

Dimensions:

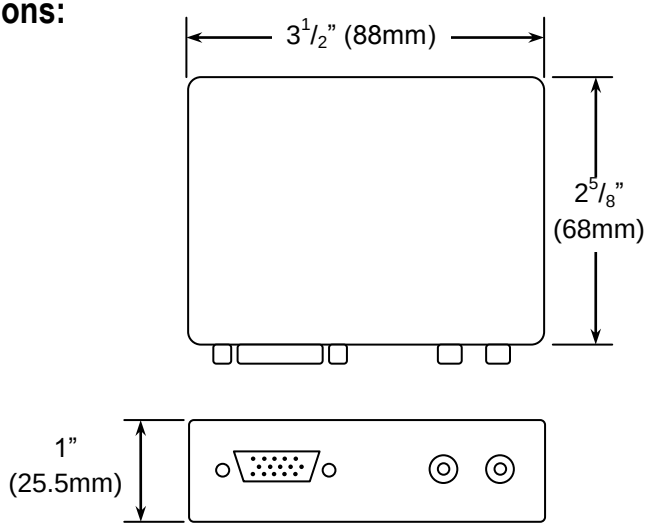

Overview:

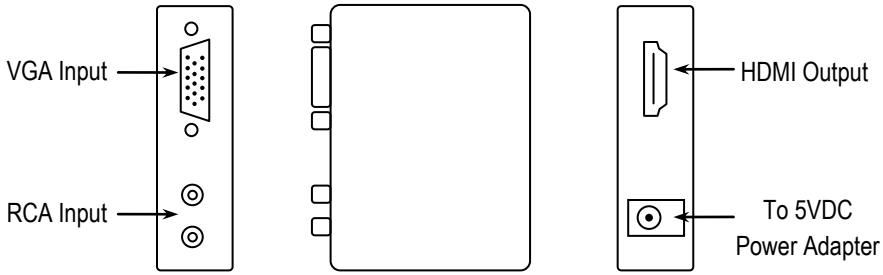

Installation:

1. Determine the location where the MVA-VH01Q unit will be installed.
2. Connect the input source's VGA cable to the VGA input on the MVA-VH01Q.
3. Connect the source's RCA cable to the audio input on the MVA-VH01Q.
4. Connect the output source's HDMI cable to the HDMI output on the MVA-VH01Q.
5. Connect the included 5VDC adapter to the unit.
6. Switch on the input and output sources and verify that the system is functioning properly.

Sample Application:

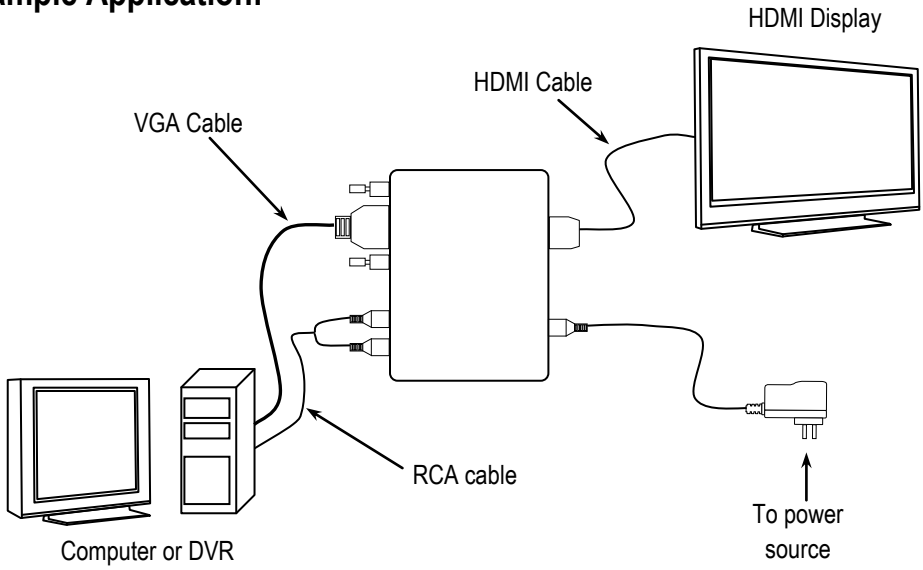

Troubleshooting

HDMI device does not function correctly	• Make sure the converter is powered. • Make sure the input and output devices are powered. • Test the VGA and RCA cables separately to make sure they are functioning. • Test the HDMI cable separately to make sure it is functioning. • Make sure that you are trying to convert VGA to HDMI. The MVA-VH01Q does not convert HDMI to VGA. • Make sure the HDMI source is compatible with the HDMI display.

Products Available from SECO-LARM:

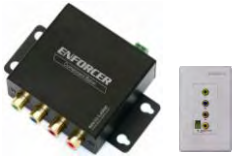

Component Video over Cat5e/6

VGA over Cat5e/6 1-in 5-out

HDMI® over Cat5e/6

HDMI® Cables

Audio Baluns

HDMI Switcher

HDMI, the HDMI Logo and High-Definition Multimedia Interface are trademarks or registered trademarks of HDMI Licensing LLC in the United States and other countries.

WARRANTY This SECO-LARM product is warranted against defects in material and workmanship while used in normal service for a period of one (1) year from the date of sale to the original consumer customer. SECO-LARM's obligation is limited to the repair or replacement of any defective part if the unit is returned, transportation prepaid, to SECO-LARM.
This Warranty is void if damage is caused by or attributed to acts of God, physical or electrical misuse or abuse, neglect, repair, or alteration, improper or abnormal usage, or faulty installation, or if for any other reason SECO-LARM determines that such equipment is not operating properly as a result of causes other than defects in material and workmanship.
The sole obligation of SECO-LARM, and the purchaser's exclusive remedy, shall be limited to replacement or repair only, at SECO-LARM's option. In no event shall SECO-LARM be liable for any special, collateral, incidental, or consequential personal or property damages of any kind to the purchaser or anyone else.

NOTICE: The information and specifications printed in this manual are current at the time of publication. However, the SECO-LARM policy is one of continual development and improvement. For this reason, SECO-LARM reserves the right to change specifications without notice. SECO-LARM is also not responsible for misprints or typographical errors.
Copyright © 2013 SECO-LARM U.S.A., Inc. All rights reserved. This material may not be reproduced or copied, in whole or in part, without the written permission of SECO-LARM.

SECO-LARM U.S.A., Inc.
16842 Millikan Avenue, Irvine, CA 92606
Tel: 800-662-0800 / 949-261-2999 Fax: 949-261-7326
Website: www.seco-larm.com
E-mail: sales@seco-larm.com

PICCN3
mi-MVA-VH010Q_1005.docx